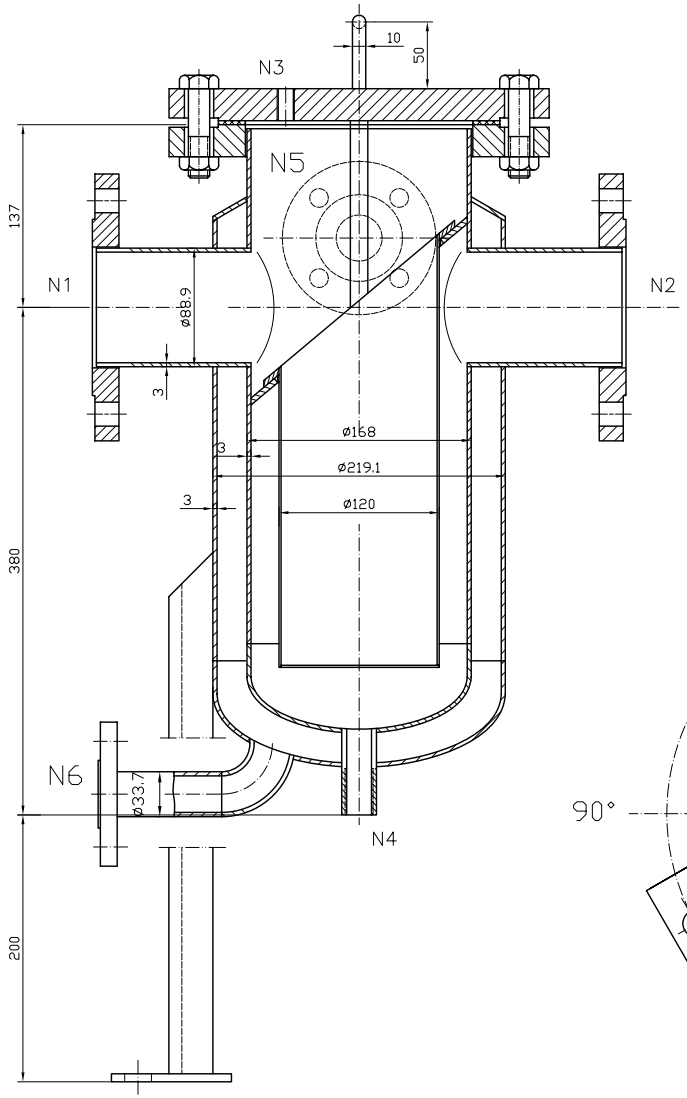

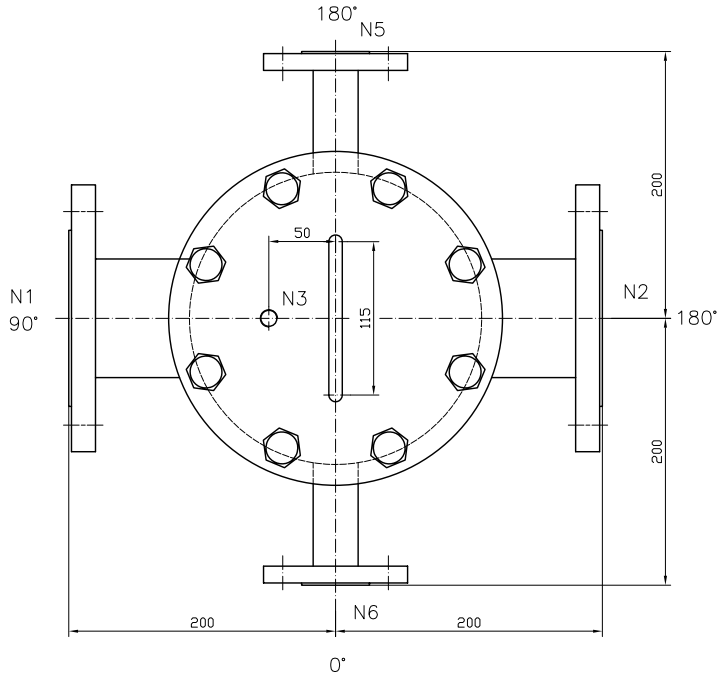

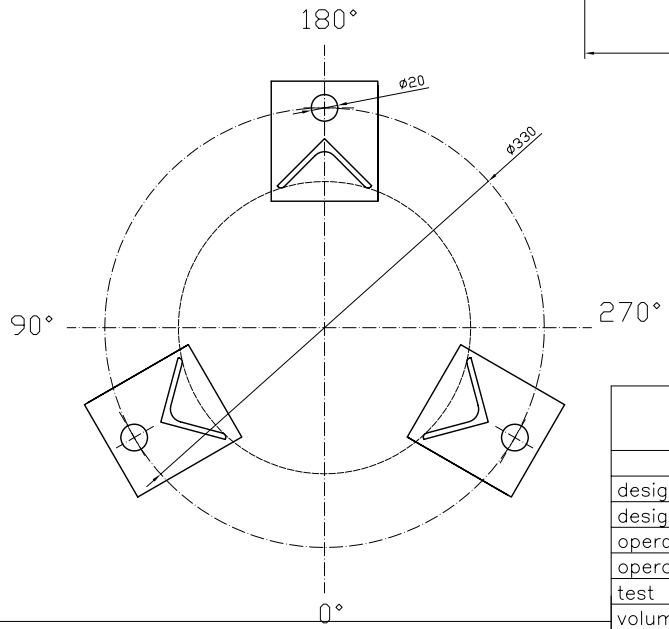

NOZZLES DATA					
MARK	NORMAL SIZE	SERVICE	CONNECT STANDARD	FACE	RANK
N1	DN80	INLET	GB/T9119-2010	RF	PN10
N2	DN80	OUTLET	GB/T9119-2010	RF	PN10
N3	BSP 1/4"	VENT	DIN ISO 228-1		
N4	BSP 1"	DRAIN	DIN ISO 228-1		
N5	DN25	JACKET INLET	GB/T9119-2010	RF	PN10
N6	DN25	JACKET OUTLET	GB/T9119-2010	RF	PN10

technical data

	vessel	jacket	
design pressure	10	6	bar
design temperature	160	160	°C
operating pressure max.			bar
operating temperature max.			°C
test pressure with water 20°C			bar
volume			l

GUANGZHOU RENXIN

draw: JG CHГ

date:

appr.

scale: 1:1

drawing no.: ST-20160709-1

name: SBF-0102-BB10-080D-H